Cambridge International AS & A Level

Cambridge Assessment International Education
Cambridge International Advanced Subsidiary and Advanced Level

CANDIDATE NAME

CENTRE NUMBER

CANDIDATE NUMBER

2292759248

PHYSICS **9702/41**

Paper 4 A Level Structured Questions **October/November 2019**

2 hours

Candidates answer on the Question Paper.

No Additional Materials are required.

READ THESE INSTRUCTIONS FIRST

Write your centre number, candidate number and name on all the work you hand in.
Write in dark blue or black pen.
You may use an HB pencil for any diagrams or graphs.
Do not use staples, paper clips, glue or correction fluid.
DO **NOT** WRITE IN ANY BARCODES.

Answer **all** questions.

Electronic calculators may be used.
You may lose marks if you do not show your working or if you do not use appropriate units.

At the end of the examination, fasten all your work securely together.
The number of marks is given in brackets [ ] at the end of each question or part question.

This document consists of **25** printed pages and **3** blank pages.

DC (CJ) 184817
© UCLES 2019

Cambridge Assessment International Education

[Turn over

Data

speed of light in free space	$c = 3.00 \times 10^{8}\,\text{m s}^{-1}$
permeability of free space	$\mu_0 = 4\pi \times 10^{-7}\,\text{H m}^{-1}$
permittivity of free space	$\varepsilon_0 = 8.85 \times 10^{-12}\,\text{F m}^{-1}$
	$(\frac{1}{4\pi\varepsilon_0} = 8.99 \times 10^{9}\,\text{m F}^{-1})$
elementary charge	$e = 1.60 \times 10^{-19}\,\text{C}$
the Planck constant	$h = 6.63 \times 10^{-34}\,\text{J s}$
unified atomic mass unit	$1\,\text{u} = 1.66 \times 10^{-27}\,\text{kg}$
rest mass of electron	$m_e = 9.11 \times 10^{-31}\,\text{kg}$
rest mass of proton	$m_p = 1.67 \times 10^{-27}\,\text{kg}$
molar gas constant	$R = 8.31\,\text{J K}^{-1}\,\text{mol}^{-1}$
the Avogadro constant	$N_A = 6.02 \times 10^{23}\,\text{mol}^{-1}$
the Boltzmann constant	$k = 1.38 \times 10^{-23}\,\text{J K}^{-1}$
gravitational constant	$G = 6.67 \times 10^{-11}\,\text{N m}^2\,\text{kg}^{-2}$
acceleration of free fall	$g = 9.81\,\text{m s}^{-2}$

© UCLES 2019

Formulae

uniformly accelerated motion	$s = ut + \frac{1}{2}at^2$ $v^2 = u^2 + 2as$
work done on/by a gas	$W = p\Delta V$
gravitational potential	$\phi = -\frac{Gm}{r}$
hydrostatic pressure	$p = \rho gh$
pressure of an ideal gas	$p = \frac{1}{3}\frac{Nm}{V}\langle c^2 \rangle$
simple harmonic motion	$a = -\omega^2 x$
velocity of particle in s.h.m.	$v = v_0 \cos \omega t$ $v = \pm \omega \sqrt{(x_0^2 - x^2)}$
Doppler effect	$f_o = \frac{f_s v}{v \pm v_s}$
electric potential	$V = \frac{Q}{4\pi\varepsilon_0 r}$
capacitors in series	$1/C = 1/C_1 + 1/C_2 + \ldots$
capacitors in parallel	$C = C_1 + C_2 + \ldots$
energy of charged capacitor	$W = \frac{1}{2}QV$
electric current	$I = Anvq$
resistors in series	$R = R_1 + R_2 + \ldots$
resistors in parallel	$1/R = 1/R_1 + 1/R_2 + \ldots$
Hall voltage	$V_H = \frac{BI}{ntq}$
alternating current/voltage	$x = x_0 \sin \omega t$
radioactive decay	$x = x_0 \exp(-\lambda t)$
decay constant	$\lambda = \frac{0.693}{t_{\frac{1}{2}}}$

© UCLES 2019

[Turn over

Answer **all** the questions in the spaces provided.

1 **(a)** State Newton's law of gravitation.

.....

.....

..... [2]

(b) A geostationary satellite orbits the Earth. The orbit of the satellite is circular and the period of the orbit is 24 hours.

(i) State **two** other features of this orbit.

1. .....

.....

2. .....

.....
[2]

(ii) The radius of the orbit of the satellite is 4.23×10^4 km.

Determine a value for the mass of the Earth. Explain your working.

mass = ... kg [4]

[Total: 8]

© UCLES 2019

2 **(a)** The kinetic theory of gases is based on a number of assumptions about the molecules of a gas.

State the assumption that is related to the volume of the molecules of the gas.

.....

.....

..... [2]

(b) An ideal gas occupies a volume of $2.40 \times 10^{-2}\,m^3$ at a pressure of $4.60 \times 10^{5}\,Pa$ and a temperature of 23 °C.

(i) Calculate the number of molecules in the gas.

number = ... [3]

(ii) Each molecule has a diameter of approximately $3 \times 10^{-10}\,m$.

Estimate the total volume of the gas molecules.

volume = ... m^3 [3]

(c) By reference to your answer in **(b)(ii)**, suggest why the assumption in **(a)** is justified.

.....

..... [1]

[Total: 9]

© UCLES 2019

BLANK PAGE

© UCLES 2019

3 **(a)** State what is meant by *specific latent heat*.

.....

.....

..... [2]

(b) A student determines the specific latent heat of vaporisation of a liquid using the apparatus illustrated in Fig. 3.1.

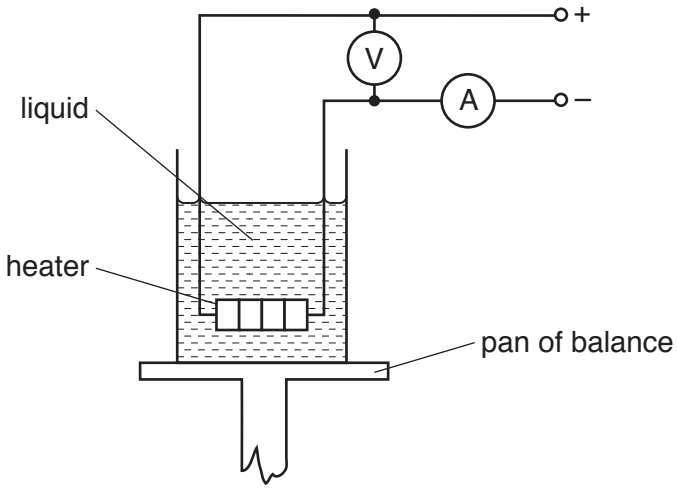

Fig. 3.1

The heater is switched on. When the liquid is boiling at a constant rate, the balance reading is noted at 2.0 minute intervals.

After 10 minutes, the current in the heater is reduced and the balance readings are taken for a further 12 minutes.

© UCLES 2019

The readings of the ammeter and of the voltmeter are given in Fig. 3.2.

	ammeter reading /A	voltmeter reading /V
from time 0 to time 10 minutes	1.2	230
after time 10 minutes	1.0	190

Fig. 3.2

The variation with time of the balance reading is shown in Fig. 3.3.

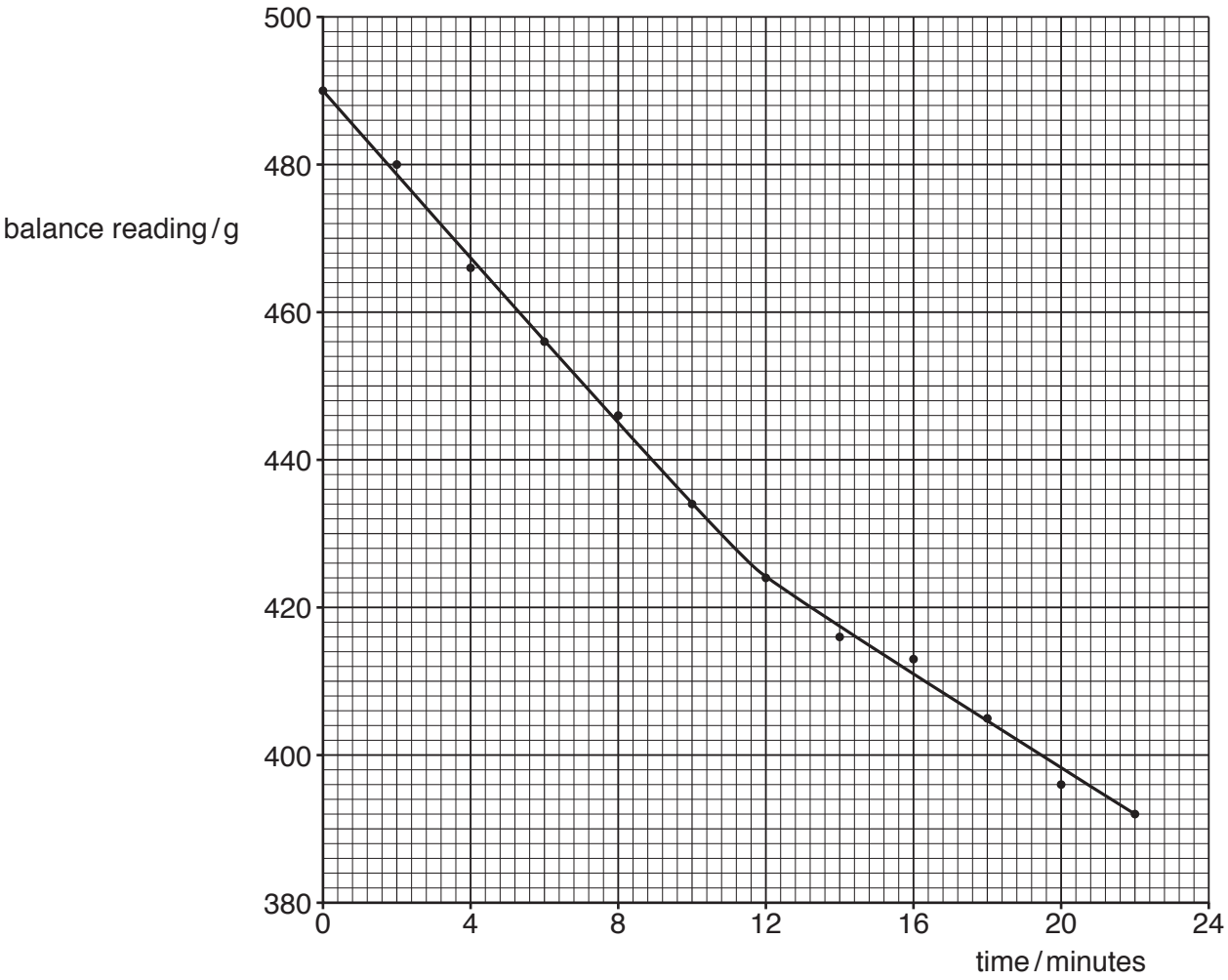

Fig. 3.3

© UCLES 2019

(i) From time 0 to time 10.0 minutes, the mass of liquid evaporated is 56 g.

Use Fig. 3.3 to determine the mass of liquid evaporated from time 12.0 minutes to time 22.0 minutes.

mass = ... g [1]

(ii) Explain why, although the power of the heater is changed, the rate of loss of thermal energy to the surroundings may be assumed to be constant.

.....

..... [1]

(iii) Determine a value for the specific latent heat of vaporisation L of the liquid.

L = ... $J g^{-1}$ [4]

(iv) Calculate the rate at which thermal energy is transferred to the surroundings.

rate = ... W [2]

[Total: 10]

© UCLES 2019

[Turn over

4 A mass is suspended vertically from a fixed point by means of a spring, as illustrated in Fig. 4.1.

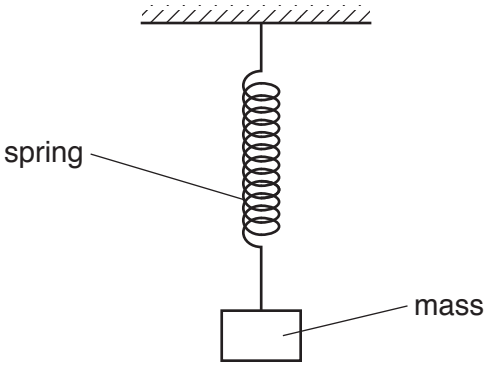

Fig. 4.1

The mass is oscillating vertically. The variation with displacement x of the acceleration a of the mass is shown in Fig. 4.2.

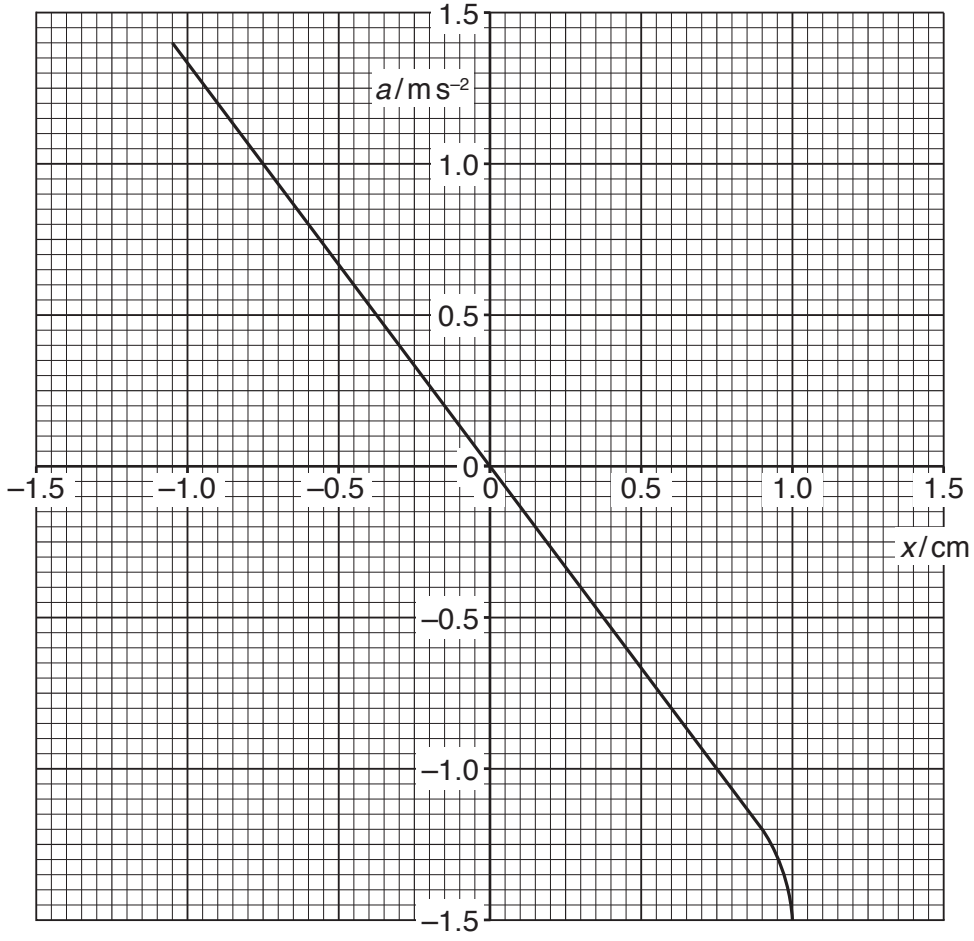

Fig. 4.2

(a) (i) State what is meant by the *displacement* of the mass on the spring.

.....

..... [1]

(ii) Suggest how Fig. 4.2 shows that the mass is not performing simple harmonic motion.

.....

..... [1]

(b) (i) The amplitude of oscillation of the mass may be changed.

State the maximum amplitude x_0 for which the oscillations are simple harmonic.

x_0 = ... cm [1]

(ii) For the simple harmonic oscillations of the mass, use Fig. 4.2 to determine the frequency of the oscillations.

frequency = ... Hz [3]

(c) The maximum speed of the mass when oscillating with simple harmonic motion of amplitude x_0 is v_0.

On Fig. 4.3, show the variation with displacement x of the velocity v of the mass for displacements from $+x_0$ to $-x_0$.

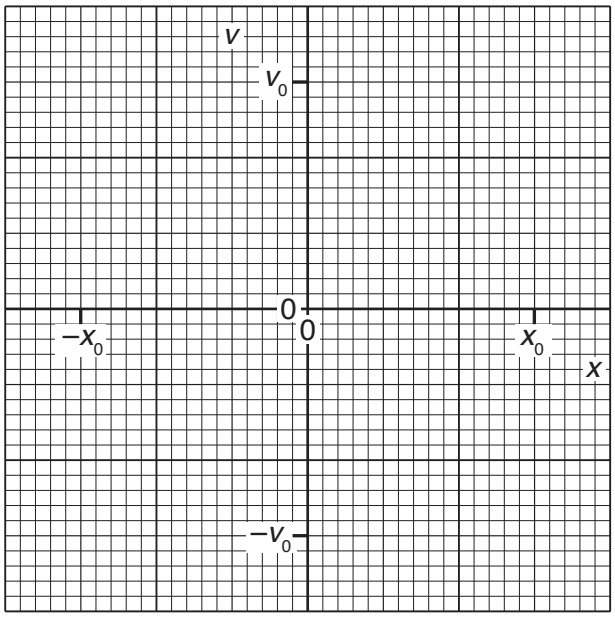

Fig. 4.3

[2]

[Total: 8]

© UCLES 2019

[Turn over

5 **(a)** A section of a coaxial cable is shown in Fig. 5.1.

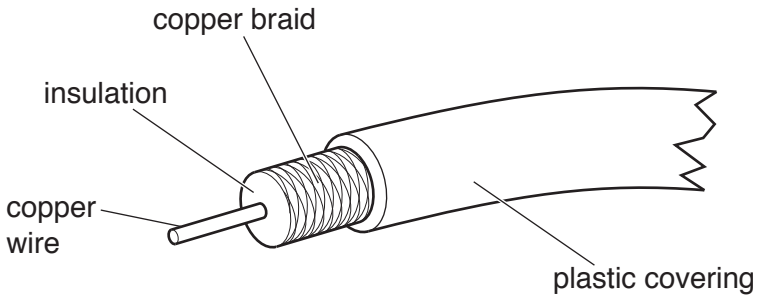

Fig. 5.1

(i) Suggest **two** functions of the copper braid.

1. .....

.....

2. .....

.....
[2]

(ii) Suggest **one** application of a coaxial cable for the transmission of electrical signals.

.....

..... [1]

(b) **(i)** The constant noise power in a transmission cable is 7.6 μW. The minimum acceptable signal-to-noise ratio is 32 dB.

Calculate the minimum acceptable signal power P_{MIN} in the cable.

P_{MIN} = ...W [2]

© UCLES 2019

(ii) The input power of the signal to the transmission cable is 2.6 W. The attenuation per unit length of the cable is 6.3 dB km^{-1}.

Use your answer in **(i)** to determine the maximum uninterrupted length L of cable along which the signal may be transmitted.

L = ... km [2]

[Total: 7]

6 **(a)** State an expression for the electric field strength E at a distance r from a point charge Q in a vacuum.
State the name of any other symbol used.

.....

.....

..... [2]

(b) Two point charges A and B are situated a distance 10.0 cm apart in a vacuum, as illustrated in Fig. 6.1.

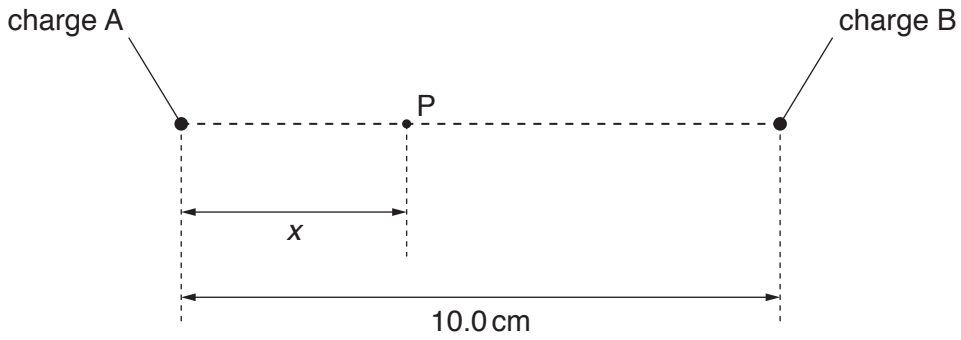

Fig. 6.1

A point P lies on the line joining the charges A and B. Point P is a distance x from A.

The variation with distance x of the electric field strength E at point P is shown in Fig. 6.2.

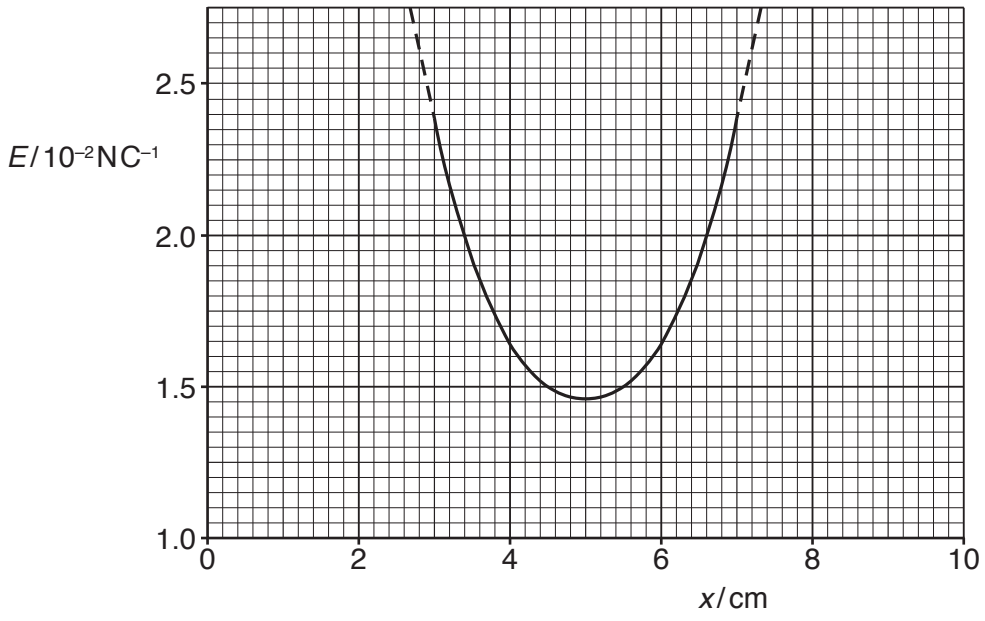

Fig. 6.2

© UCLES 2019

State and explain whether the charges A and B:

(i) have the same, or opposite, signs

.....

.....

..... [2]

(ii) have the same, or different, magnitudes.

.....

.....

..... [2]

(c) An electron is situated at point P.

Without calculation, state and explain the variation in the magnitude of the acceleration of the electron as it moves from the position where $x = 3\,\text{cm}$ to the position where $x = 7\,\text{cm}$.

.....

.....

.....

.....

.....

..... [4]

[Total: 10]

7 **(a)** An ideal operational amplifier (op-amp) has infinite bandwidth and zero output impedance.

State what is meant by:

(i) *infinite bandwidth*

.....

..... [1]

(ii) *zero output impedance*.

.....

..... [1]

(b) The circuit for a non-inverting amplifier incorporating an ideal op-amp is shown in Fig. 7.1.

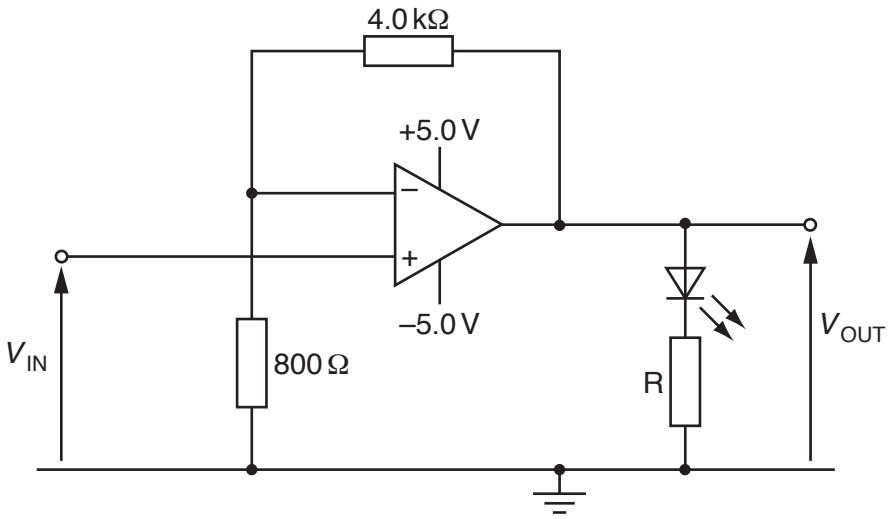

Fig. 7.1

The light-emitting diode (LED) emits light when the potential difference across it is at least 2.0 V.
The current in the LED must not be greater than 20 mA.

(i) Calculate the gain of the amplifier circuit.

gain = ... [2]

© UCLES 2019

(ii) Determine the value of V_{IN} for which the value of V_{OUT} is +2.0 V.

V_{IN} = ... V [1]

(iii) State the maximum value of the output potential V_{OUT}.

maximum potential = ... V [1]

(iv) When the op-amp is saturated, the potential difference across the LED is 2.2 V.

Calculate the minimum resistance of resistor R so that the current in the LED is limited to 20 mA.

resistance = ... Ω [2]

[Total: 8]

8 **(a)** A long straight vertical wire carries a current I. The wire passes through a horizontal card EFGH, as shown in Fig. 8.1 and Fig. 8.2.

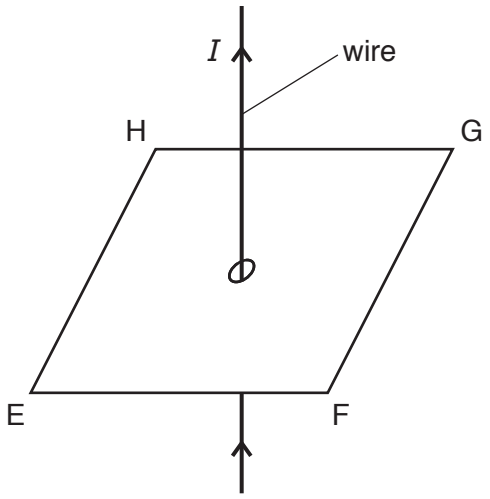

Fig. 8.1

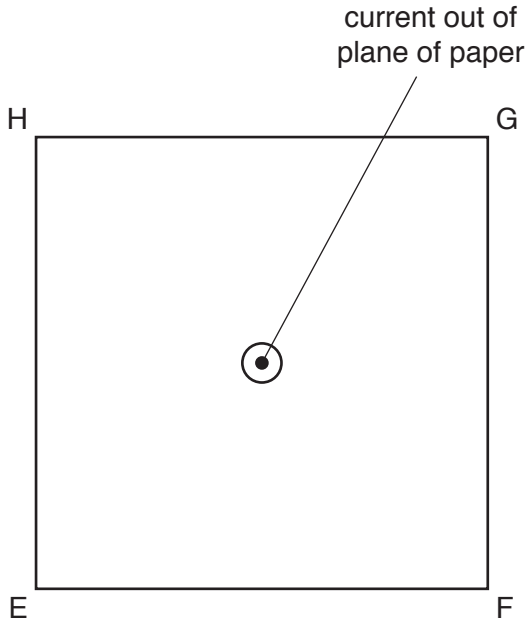

Fig. 8.2 (view from above)

On Fig. 8.2, draw the pattern of the magnetic field produced by the current-carrying wire on the plane EFGH. [3]

(b) Two long straight parallel wires P and Q are situated a distance 3.1 cm apart, as illustrated in Fig. 8.3.

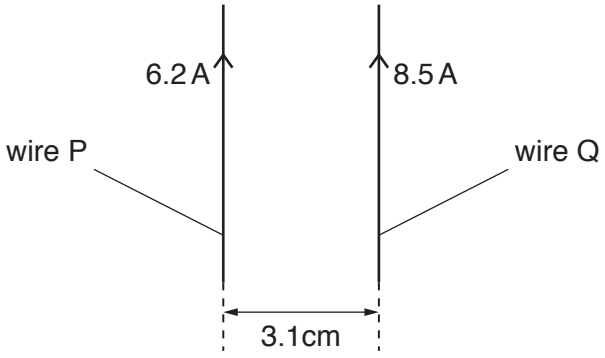

Fig. 8.3

The current in wire P is 6.2 A. The current in wire Q is 8.5 A.

The magnetic flux density B at a distance x from a long straight wire carrying current I is given by the expression

$$B = \frac{\mu_0 I}{2\pi x}$$

where μ_0 is the permeability of free space.

© UCLES 2019

Calculate:

(i) the magnetic flux density at wire Q due to the current in wire P

flux density = ... T [2]

(ii) the force per unit length, in $N\,m^{-1}$, acting on wire Q due to the current in wire P.

force per unit length = ... $N\,m^{-1}$ [2]

(c) The currents in wires P and Q are different in magnitude.

State and explain whether the forces per unit length on the two wires will be different.

.....

.....

..... [2]

[Total: 9]

BLANK PAGE

© UCLES 2019

9 Diagnosis using nuclear magnetic resonance imaging (NMRI) requires the use of a non-uniform magnetic field superimposed on a constant magnetic field of large magnitude.

Explain the purpose of:

(a) the large constant magnetic field

.....

.....

.....

.....

..... [2]

(b) the non-uniform magnetic field.

.....

.....

.....

.....

..... [2]

[Total: 4]

10 A bridge rectifier using four ideal diodes is shown in Fig. 10.1.

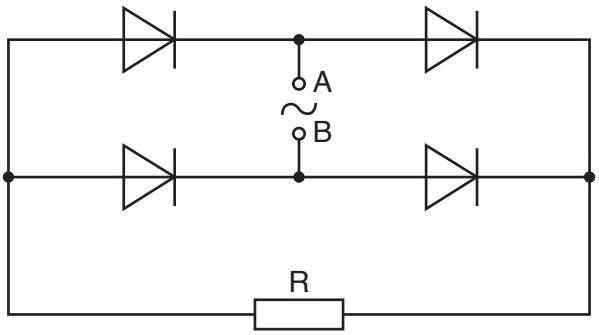

Fig. 10.1

The sinusoidal alternating electromotive force (e.m.f.) applied between points A and B has a root-mean-square (r.m.s.) value of 7.0 V.

(a) (i) On Fig. 10.1, circle the diodes that conduct when point B is positive with respect to point A. [1]

(ii) Calculate the maximum potential difference V_{MAX} across resistor R.

V_{MAX} = ... V [1]

© UCLES 2019

(b) A capacitor is connected into the circuit to produce smoothing of the potential difference across resistor R.

The variation with time *t* of the potential difference *V* across resistor R is shown in Fig. 10.2.

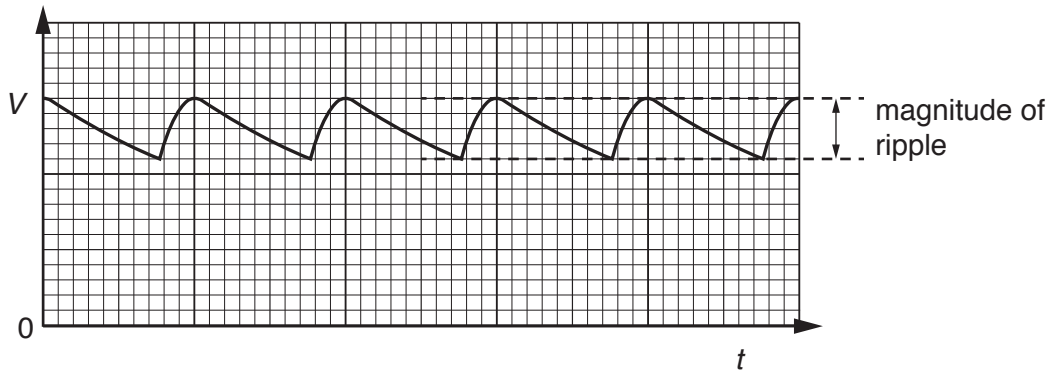

Fig. 10.2

(i) On Fig. 10.1, draw the symbol for a capacitor, connected so as to produce smoothing. [1]

(ii) State the effect, if any, on the magnitude of the ripple on *V* when, separately:

1. a capacitor of larger capacitance is used

.....

2. the resistor R has a smaller resistance.

.....
[2]

[Total: 5]

11 **(a)** With reference to the photoelectric effect, state what is meant by *work function energy*.

.....

.....

..... [2]

(b) The work function energy of a clean metal surface is 5.5×10^{-19} J.

Electromagnetic radiation of wavelength 280 nm is incident on the metal surface. The metal is in a vacuum.

(i) Calculate:

1. the photon energy

photon energy = ... J [2]

2. the maximum speed v_{MAX} of the electrons emitted from the surface.

v_{MAX} = ... $m\,s^{-1}$ [3]

(ii) Explain why most of the emitted electrons will have a speed lower than v_{MAX}.

.....

..... [1]

© UCLES 2019

(c) The electromagnetic radiation incident on the metal surface may change in intensity or in frequency.

Complete Fig. 11.1 by inserting either '*increases*' or '*decreases*' or '*no change*' to describe the effects of the changes shown on the maximum speed and on the rate of emission of electrons.

change	maximum speed of electrons	rate of emission of electrons
reduced intensity at constant frequency	.....	.....
increased frequency at constant intensity	.....	.....

Fig. 11.1

[4]

[Total: 12]

12 One possible nuclear reaction that takes place is

$$^{235}_{92}\text{U} + ^{1}_{0}\text{n} \rightarrow ^{95}_{42}\text{Mo} + ^{139}_{57}\text{La} + 2^{1}_{0}\text{n} + 7^{0}_{-1}\text{e}$$

Data for nuclei in this reaction are given in Fig. 12.1.

nucleus	mass / u	total mass of separate nucleons / u	mass defect / u	binding energy per nucleon / MeV
$^{95}_{42}$Mo	94.906	95.765	0.859	8.443
$^{139}_{57}$La	138.906	140.125	1.219	8.189
$^{235}_{92}$U	235.044	236.909	1.865	.....

Fig. 12.1

(a) Show that the energy equivalent to a mass of 1.00 u is 934 MeV.

[2]

(b) **(i)** Use data from Fig. 12.1 to calculate the binding energy per nucleon of a nucleus of uranium-235 ($^{235}_{92}$U). Complete Fig. 12.1.

[2]

(ii) The nucleon number of an isotope of the element rutherfordium is 267.

State whether the binding energy per nucleon of this isotope will be greater than, equal to or less than the binding energy per nucleon of uranium-235.

..... [1]

© UCLES 2019

(c) Calculate the total energy, in MeV, released in this nuclear reaction.

energy = ... MeV [2]

(d) The nuclei in 1.2×10^{-7} mol of uranium-235 all undergo this reaction in a time of 25 ms.

Calculate the average power release during the time of 25 ms.

power = ... W [3]

[Total: 10]

© UCLES 2019

BLANK PAGE

Permission to reproduce items where third-party owned material protected by copyright is included has been sought and cleared where possible. Every reasonable effort has been made by the publisher (UCLES) to trace copyright holders, but if any items requiring clearance have unwittingly been included, the publisher will be pleased to make amends at the earliest possible opportunity.

To avoid the issue of disclosure of answer-related information to candidates, all copyright acknowledgements are reproduced online in the Cambridge Assessment International Education Copyright Acknowledgements Booklet. This is produced for each series of examinations and is freely available to download at www.cambridgeinternational.org after the live examination series.

Cambridge Assessment International Education is part of the Cambridge Assessment Group. Cambridge Assessment is the brand name of the University of Cambridge Local Examinations Syndicate (UCLES), which itself is a department of the University of Cambridge.

© UCLES 2019